# ARYAN PAJOUHESH ENG. Co.
# Valpes

## 2 way PVC ball valve coupled with quarter-turn electrical actuator "ER"

**Threaded type**

**Technical specification of actuator**

**Quarter-turn ( 90º ) electrical actuator ER**

**Power supply** : 230 V AC
12 / 24 V AC/DC
24 V AC/DC

**Duty rating** : 50% for 230 V AC
30% for 12/24 V AC

**Protection** : IP 65

**Operating temperture** : -10 ... 55 ºC

**Output switch** : 4 SPDT micro switch

**Mounting pad** : ISO 5211 / DIN 3337

**Extra option :**

Positioner with 4 ... 20 mA input/output
0 ... 10 V input/output

Potentiometer 1 / 5 / 10 K Ohms

**Technical specification of valve**

**Type** : threaded type PVC ball valve

**Body material** : PVC

**Seat** : PTFE

**Operating pressure** : PN 10 at 20 °C

**Operating temperature** : +50 ºC

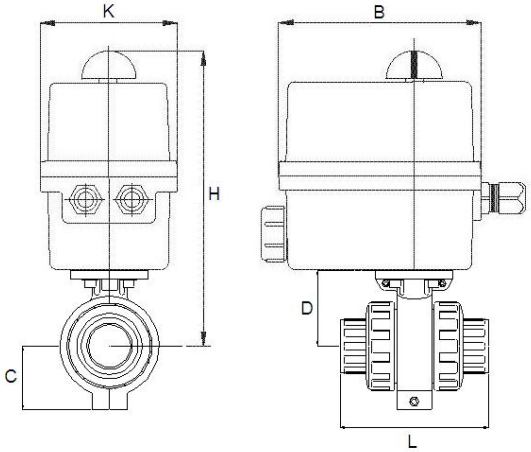


| Valve size (G) | Actuator | PN | DN | L | C | D | K | B | H | |
|---|---|---|---|---|---|---|---|---|---|---|
| ⅜" | ER10 | 10 | 10 | 97 | 49 | 58 | 92 | 136 | 205 | |
| ½" | ER10 | 10 | 15 | 97 | 49 | 58 | 92 | 136 | 205 | |
| ¾" | ER10 | 10 | 20 | 103 | 48 | 61 | 92 | 136 | 208 | |
| 1" | ER20 | 10 | 25 | 116 | 46 | 68 | 92 | 136 | 215 | |
| 1 ¼" | ER20 | 10 | 32 | 141 | 57 | 72 | 92 | 136 | 219 | |
| 1 ½" | ER35 | 10 | 40 | 148 | 68 | 90 | 92 | 136 | 237 | |
| 2" | ER35 | 10 | 50 | 162 | 75 | 98 | 92 | 136 | 245 | |


ARYAN PAJOUHESH ENG. Co.
1st Floor , No. 39 , 27th St. , Kordestan Exp.
Zip Code: 1437747191 , Tehran – IRAN
Tel.: +98 (21) 88335507-10
Fax: +98 (21) 88010484
Email: info@aryanpajouhesh.com

شرکت آریان پژوهش
تهران- بزرگراه کردستان , خیابان ۲۷ غربی ,
پلاک ۳۹ , طبقه اول کدپستی ۱۴۳۷۷۴۷۱۹۱
تلفن : ۱۰-۸۸۳۳۵۵۰۷
فاکس : ۸۸۰۱۰۴۸۴